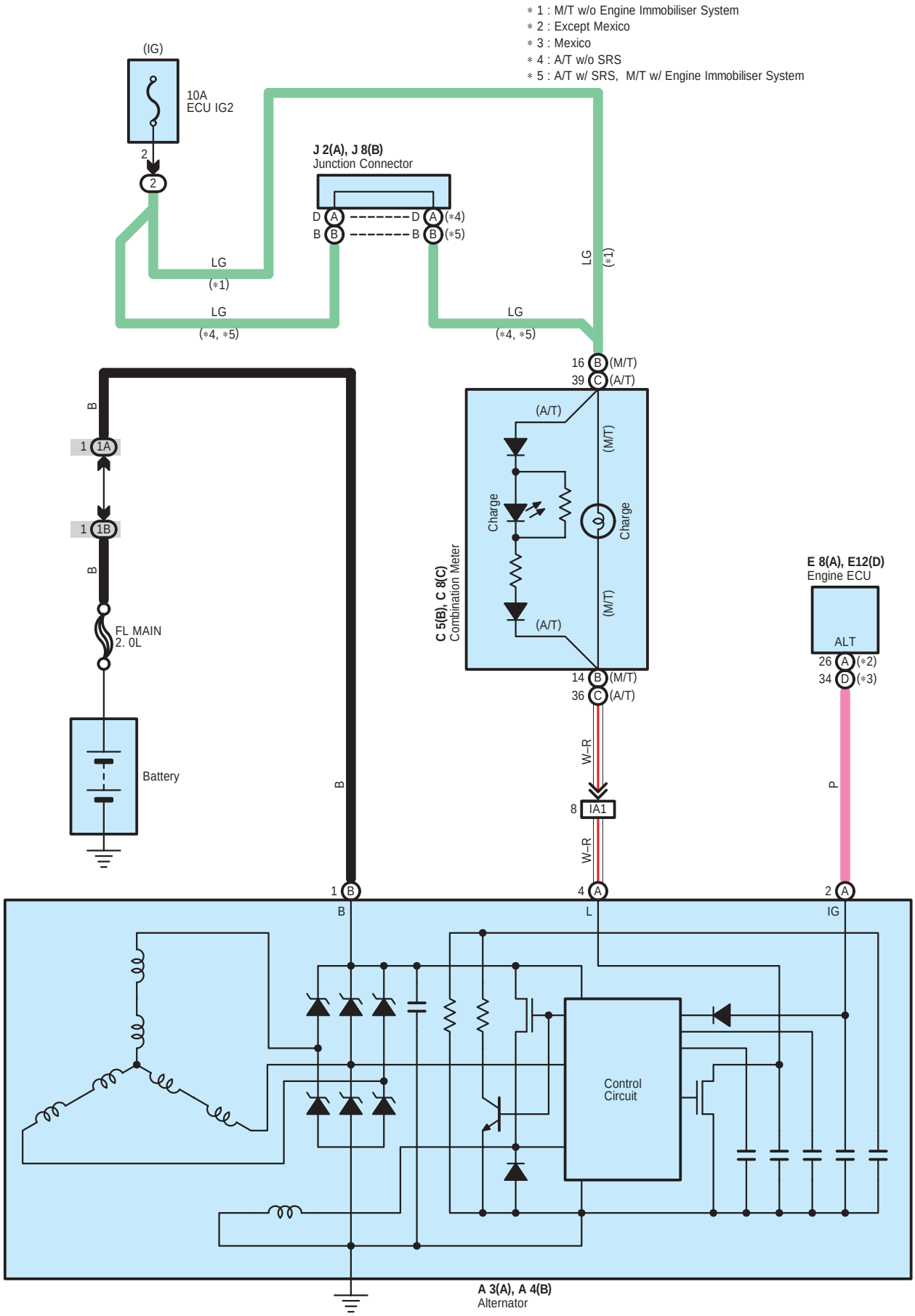
∗ 1 : M/T w/o Engine Immobiliser System
∗ 2 : Except Mexico
∗ 3 : Mexico
∗ 4 : A/T w/o SRS
∗ 5 : A/T w/ SRS, M/T w/ Engine Immobiliser System
(IG)
10A
ECU IG2
2
J 2(A), J 8(B)
Junction Connector
D A D A (∗4)
B B B B (∗5)
LG
(∗1)
LG
(∗4, ∗5)
LG
(∗4, ∗5)
LG
(∗1)
16 B (M/T)
39 C (A/T)
(A/T)
(M/T)
Charge
Charge
(M/T)
(A/T)
C 5(B), C 8(C)
Combination Meter
14 B (M/T)
36 C (A/T)
E 8(A), E12(D)
Engine ECU
ALT
26 A (∗2)
34 D (∗3)
B
1 1A
1 1B
B
FL MAIN
2. 0L
Battery
B
W–R
8 IA1
W–R
P
1 B
B
4 A
L
2 A
IG
Control
Circuit
A 3(A), A 4(B)
Alternator

: Parts Location

Code		See Page	Code		See Page	Code		See Page
A3	A	24 (*1)	A4	B	34 (*4)	E8	A	36 (*5)
		26 (*2)	C5	B	28 (LHD)			38 (*6)
		32 (*3)			36 (*5)	E12	D	28 (LHD)
		34 (*4)			38 (*6)	J2	A	39 (*6)
A4	B	24 (*1)	C8	C	28 (LHD)	J8	B	29 (LHD)
		26 (*2)			38 (*6)			37 (*5)
		32 (*3)	E8	A	28 (LHD)			

: Relay Blocks

Code	See Page	Relay Blocks (Relay Block Location)
2	23 (LHD)	Fuse Block (Left Kick Panel)
	23 (RHD)	Fuse Block (Right Kick Panel)

: Junction Block and Wire Harness Connector

Code	See Page	Junction Block and Wire Harness (Connector Location)
1A	22	Engine No.2 Wire and Engine Room J/B (Engine Compartment Right)
1B		

: Connector Joining Wire Harness and Wire Harness

Code	See Page	Joining Wire Harness and Wire Harness (Connector Location)
IA1	44 (LHD)	Engine Wire and Instrument Panel Wire (Right Kick Panel)
	48 (*5)	Engine Wire and Instrument Panel Wire (Left Kick Panel)
	49 (*6)	

* 1 : LHD 3SZ–VE * 2 : LHD K3–VE * 3 : RHD 3SZ–VE * 4 : RHD K3–VE * 5 : RHD w/ Heater * 6 : RHD w/o Heater